PRESSALIT®

| | |
|---|---|
| **Product** | Faucet with long rotatable spout and loop-shaped operating lever |
| **Item number** | RT624 |
| | VVS:701399104<br>RSK:8064033<br>EAN:5708590382470<br>HMI: 61272 |

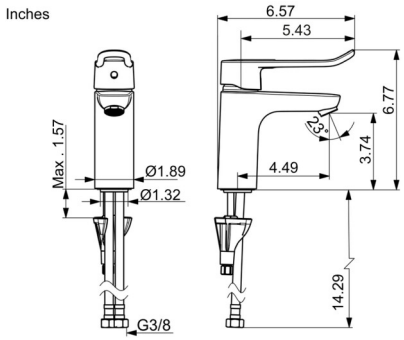


**Product description**

Faucet with long rotatable spout and loop-shaped operating lever. 6.9" flex hose. Hot and cold symbols. With water-saving Eco-effect. Without drain fitting.
We recommend T4679 plumbing kit with 0.4" compatible adaptor.

Faucet with long rotatable spout and loop-shaped operating lever. 6.9" flex hose. Hot and cold symbols. With water-saving Eco-effect. Without drain fitting.
We recommend T4679 plumbing kit with 0.4" compatible adaptor.
Material: Chronium-plated brass

| | |
|---|---|
| **Materials** | Chromium-plated brass |
| **Ergonomy** | The loop-shaped operating lever is specifically suitable for users who find it difficult to use common levers.<br>The long, rotatable spout makes it easier for a seated user to reach the water, as well as the spout can be swung to one side. |
| **Features** | Long rotatable spout.<br>The water-saving Eco-effect gives the choise between a moderate flow and a full flow. The preset moderate flow can be adjusted. |
| **Warranty** | A 5-year warranty is provided for your product from the date of purchase.<br><br>The warranty covers material or manufacturing defects. The warranty does not cover defects or damage resulting from normal wear and tear, improper operation, misuse, inadequate maintenance, use of unsuitable cleaning agents, incorrect installation, or disassembly.<br><br>In the event of a claim, you must always contact the dealer or store where you purchased the product. The warranty is conditional upon proof of purchase of the product. Pressalit will supply a spare part or replace the product with the same or a similar model. The warranty period is neither extended nor renewed when replacement products or spare parts are supplied. If replacement is not possible, Pressalit is entitled instead to refund the purchase price.<br><br>These warranty terms apply in addition to the consumer's statutory rights and do not limit or exclude them. |

| | |
|---|---|
| **Product** | Faucet with long rotatable spout and loop-shaped operating lever |
| **Item number** | RT624 |
| **Cleaning** | This product should be cleaned with hot water or a mild cleaning solution. Do not use chlorine based or corrosive cleaners as it may result in the surface being damaged. |



Pressalit A/S
Pressalitvej 1
DK-8680 Ry
Tel.: +45 8788 8788
Fax: +45 8788 8789
E-mail: pressalit@pressalit.com