PRESSALIT®

Product	PLUS shower seat 450 with aperture, manually vertical and manually horizontal adjustable
Item number	R7455000
Color	VVS:777516400 NRF:6317135 RSK:8565075 EAN:5708590359946 HMI: 124242 FDA:INN/D135865 White
Product description	PLUS shower seats are offered in a number of colours. They are available as both fixed height, electrically adjustable and manually adjustable, with and without aperture, and with an option of back and armrests. They are suitable for wall-mounting or for fitting to Pressalit PLUS wall tracks. PLUS shower seat 450 with aperture, with backrest. Manually height adjustable by 15" and adjustable horizontally, without the use of tools. The seat is foldable. Materials: Comfortable polyurethane foam over a plywood core, fitted to an aluminium profile. For mounting to horizontal wall track (not included). *Replaces R7441*
Adjustability	Vertical and horizontal adjustable
Adjustment height	14,97 inch
Product capacity	Maximum user mass: 440 lbs. When the seat is loaded with 440 lbs, each wall fastener is loaded with 37 lbs. *The seat has been tested statically with safety factor 1.5, which is a requirement according to the applied assistive products standards.*
Materials	The shower seat is made of polyurethane (PU) foam with a plywood core and this is covered with a moulded coated surface that is protected using a clear PU lacquer. The backrest is made of polyurethane (PU) foam protected using a clear PU lacquer. Internal components and fasteners are primarily made of stainless steel. The hinge barrel is capped with ABS.
Ergonomy	Ergonomically designed seat - contact surface are 17.7" x 17.2". Soft and slip-resistant material that has a warm feel.

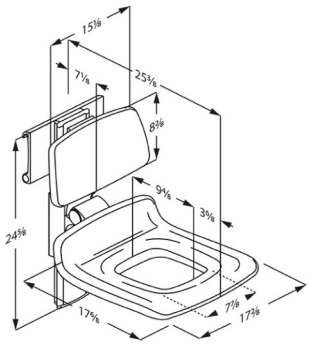

Product	PLUS shower seat 450 with aperture, manually vertical and manually horizontal adjustable
Item number	R7455000
Features	The seat can fold up when not in use or to maximize floor space. The seat and backrest can be adjusted simultaneously thanks to a safe and easy click system.
Warranty	Pressalit makes a commitment to remedy material and manufacturing defects for a period of five years from the invoicing date.
Cleaning	This product should be cleaned with hot water or a mild cleaning solution. Do not use chlorine based, corrosive or abrasive cleaners as it may result in the surface being damaged. The following cleaning agents have been tested by Pressalit and may be used, as long as they are diluted according to the instructions on the container. DISINFECTANTS: Erisan OXY+ Tvättsprit 70% CaviCide surface disinfectant decontaminant cleaner Rodalon Desinfektionsspray Terralin protect (SCHÜLKE+) Dismonzon Plus (BODE Chemie GmbH) NON-DISINFECTANTS: Wetrok Caledor (Wetrok) Petrosol Citro (Büfa) Important: Polyurethane surfaces of PLUS shower seats and PLUS backrests contains an antibacterial surface, which will be compromised if cleaned with anything other than soap and water. The product must be wiped down with a soft rag wrung out in clear water immediately after cleaning, as some materials may otherwise be discolored and stained, and the surface coating may deteriorate. DECALCIFICATION OF ALUMINUM PARTS: Pressalit recommends that water deposits (Calcium, lime etc.) be removed from wall tracks and other aluminum parts using a solution of three parts of 30% acetic acid to seven parts tap water. When the aluminum parts have been washed down with this solution, the parts should be wiped over with a damp cloth wrung out in plain water.

Product	PLUS shower seat 450 with aperture, manually vertical and manually horizontal adjustable
Item number	R7455000

pressalit.com

Pressalit A/S
Pressalitvej 1
DK-8680 Ry
Tel.: +45 8788 8788
Fax: +45 8788 8789
E-mail: pressalit@pressalit.com