PRESSALIT®

Product	Spare part kit, gas (pneumatic) spring, for SCT 3000 shower change table, 1800 mm, 2x1100N
Item number	RP00005
Product description	EAN:5708590398914 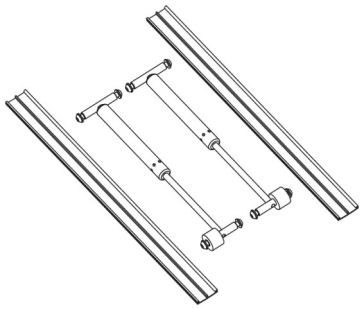 Spare part kit, gas (pneumatic) spring, for SCT 3000 shower change table, 1800 mm, 2x1100N. For units manufactured from 23/11/2020. Important: Gas (pneumatic) springs gradually lose pressure force over time. Therefore, it is not recommended to keep large quantities in stock; instead, they should be ordered as needed. Any functional issues resulting from prolonged storage are not considered product defects
Warranty	A 2-year warranty is provided for your product from the invoice date. The warranty covers material or manufacturing defects. The warranty does not cover defects or damage resulting from normal wear and tear or the use of unsuitable cleaning agents. In the event of a claim, you must always contact the dealer or store where you purchased the product. The warranty is conditional upon proof of purchase of the product. Pressalit will supply a spare part, replace the product with the same or a similar model, or refund the purchase price. These warranty terms apply in addition to the consumer's statutory rights and do not limit or exclude them.

Product	Spare part kit, gas (pneumatic) spring, for SCT 3000 shower change table, 1800 mm, 2x1100N
Item number	RP00005

Pressalit A/S
Pressalitvej 1
DK-8680 Ry
Tel.: +45 8788 8788
Fax: +45 8788 8789
E-mail: pressalit@pressalit.com