BS39/DM5

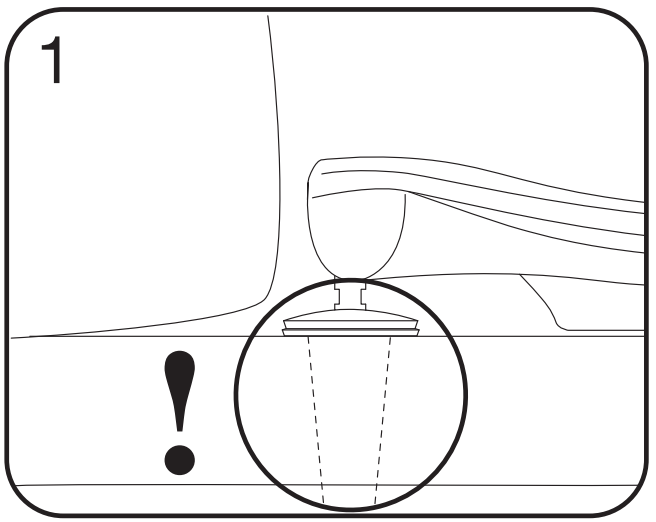

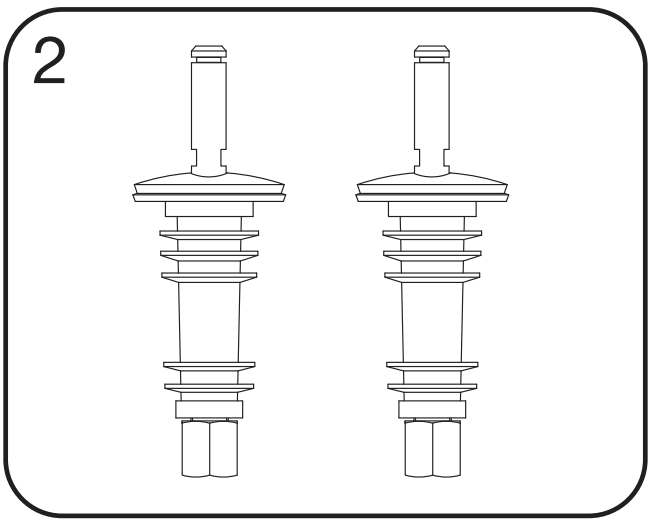

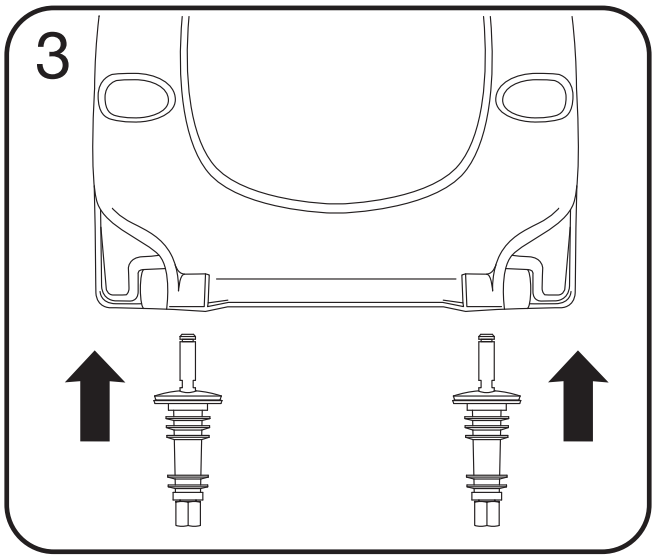

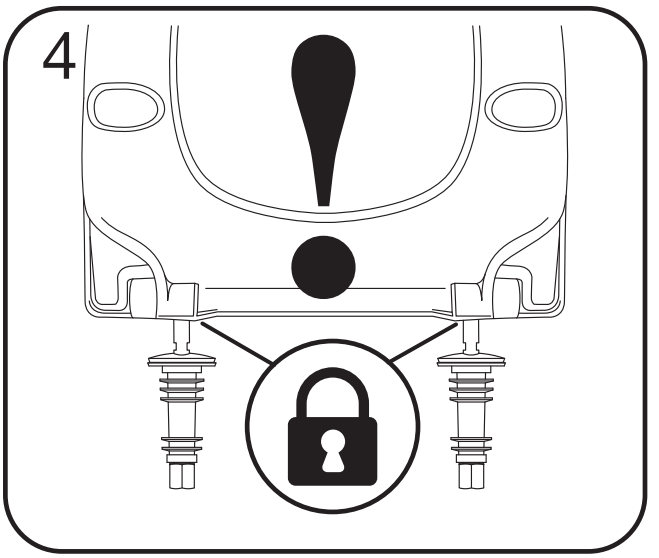

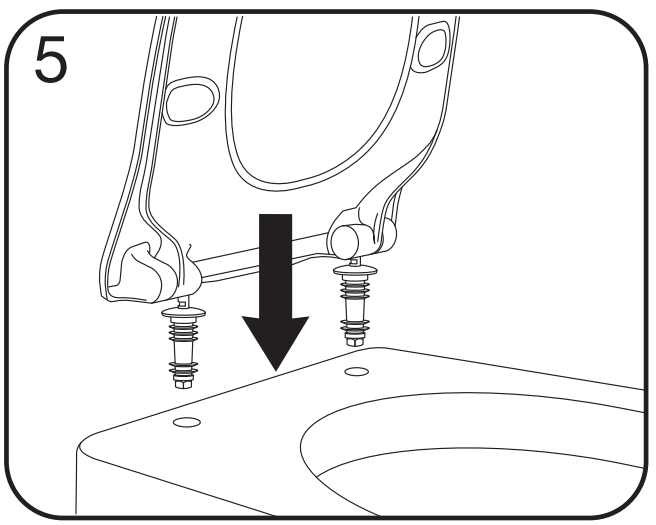



5 708590 371474

04
LDPE

12-11-2026