DM8

BLIND hole / TOP MOUNTED ⬇

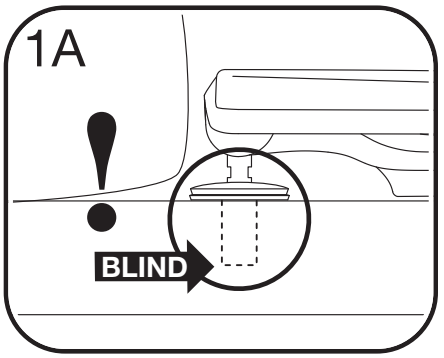

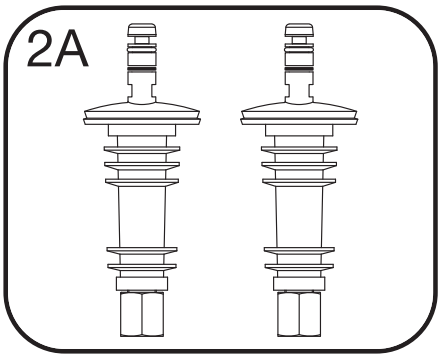

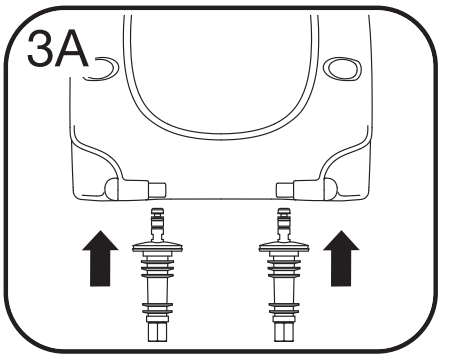

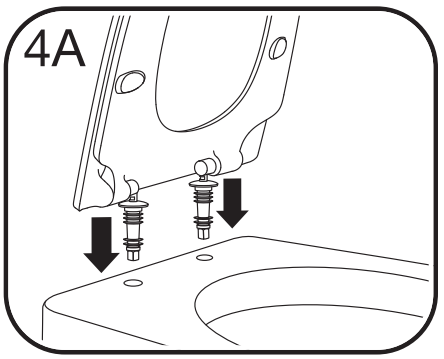

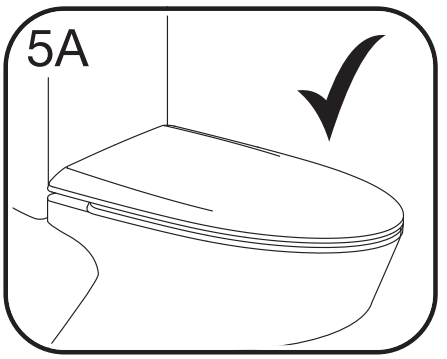

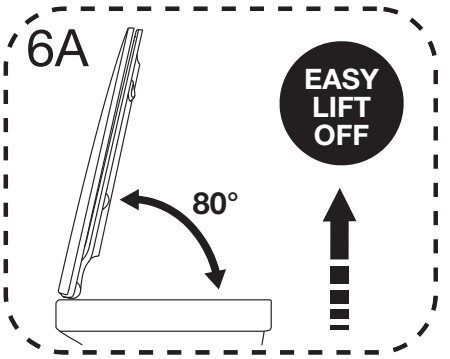

OPEN hole / BOTTOM MOUNTED ⬆

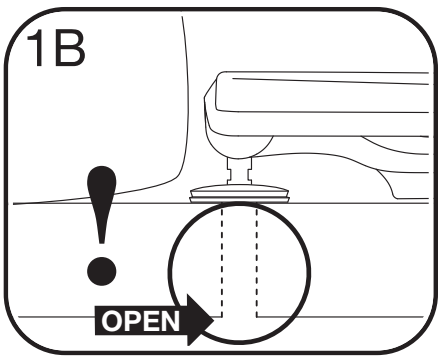

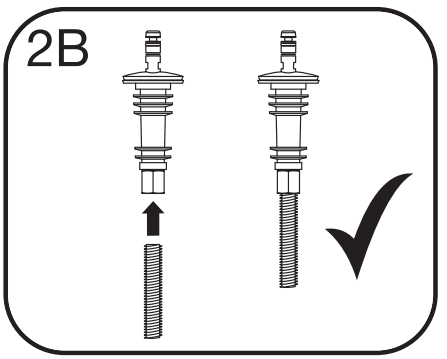

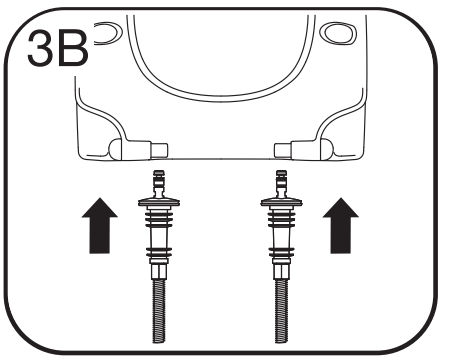

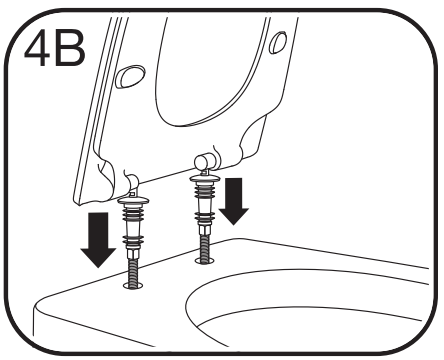

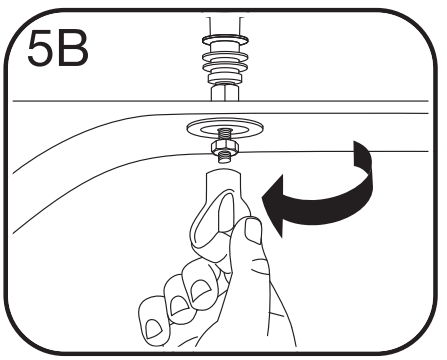

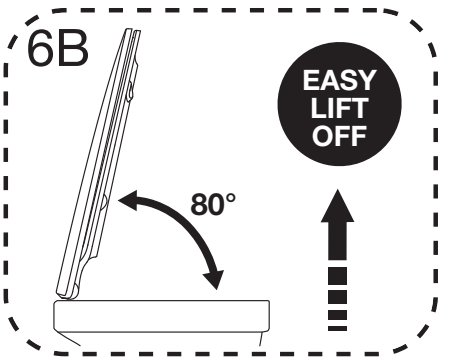

5 7 0 8 5 9 0 3 9 4 3 1 2

04
LDPE

12-11-2026