PRESSALIT®

## Universal hinge with lift-off

| | |
|---|---|
| **Item number** | DN2999<br>VVS:616810867<br>EAN:5708590396781 |

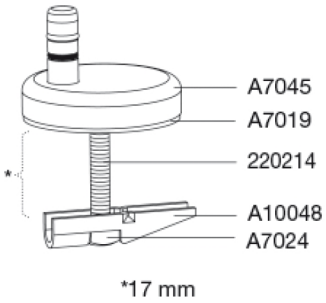


| | |
|---|---|
| **Product capacity** | |
| **Weight** | 0,148 kg |
| **Gross weight** | 0,148 kg |
| **Weight per crate** | 0 kg |
| **Qty per crate** | 0 |
| **Qty per pallet** | 0 |

The product is to be cleaned with hot water or a mild soapy cleaning agent. Do not use chlorine based or corrosive cleaners as it may result in the surface being damaged.

Subject to changes in the product range, technical changes and printing errors.



Pressalit A/S
Pressalitvej 1
DK-8680 Ry
Tel.: +45 8788 8788
Fax: +45 8788 8789
E-mail: pressalit@pressalit.com

PRESSALIT®